NO PART OF THIS DRAWING MAY BE REPRODUCED OR TRANSMITTED IN ANY FORM OR BY ANY MEANS, ELECTRONIC OR MECHANICAL, INCLUDING PHOTOCOPYING, RECORDING, OR ANY INFORMATION STORAGE OR RETRIEVAL SYSTEM WITHOUT THE PRIOR PERMISSION OF W. LUCY & CO., LTD

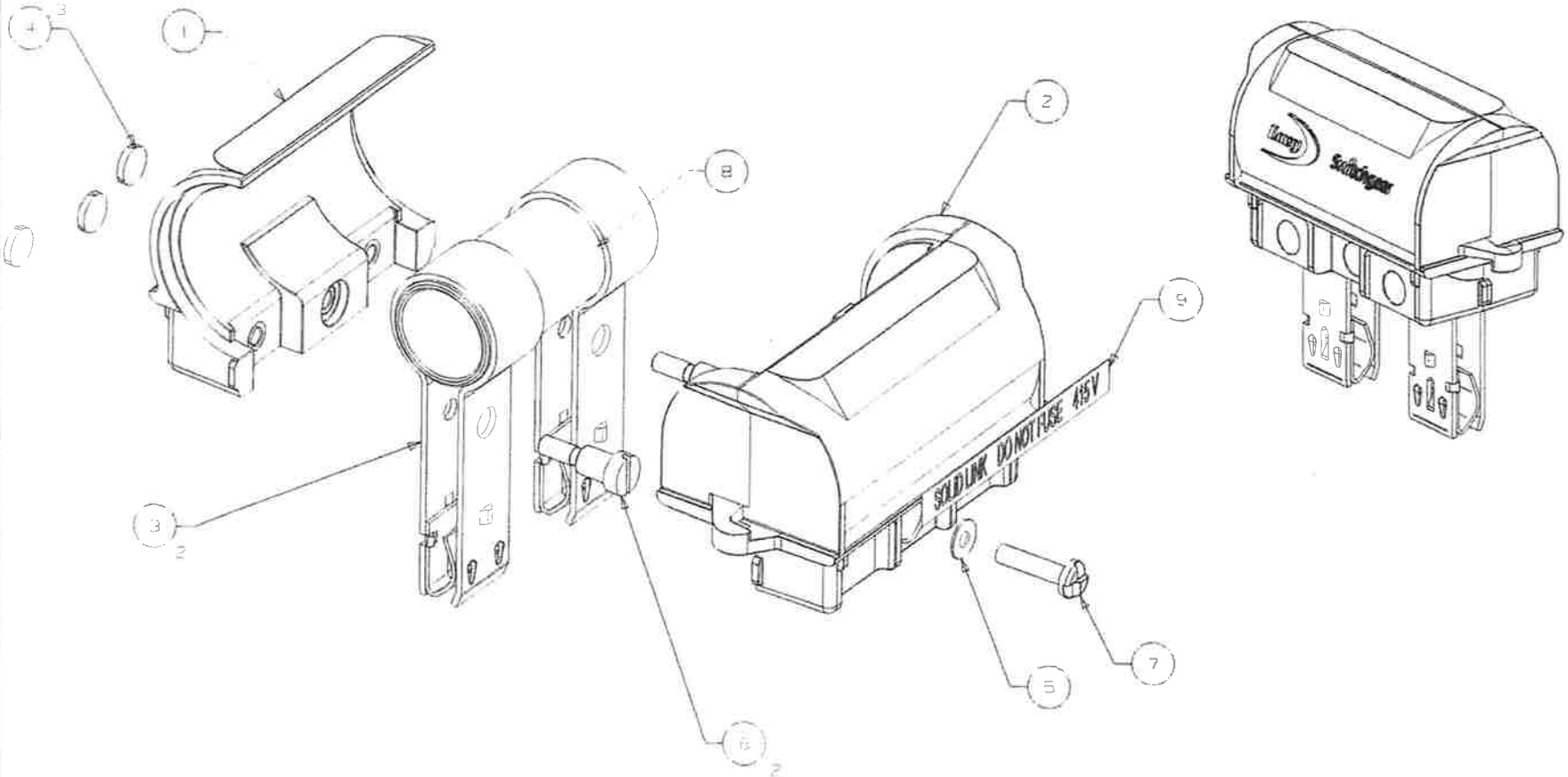

NOTE:

ITEM No.9 LABEL, TO BE FITTED TO FUSE CARRIER SIDE MOULDING IN RECESS SPACE PROVIDED

MOD.		PRODUCTION RELEASED AT ISSUE No.1
APPRV.		
DATE		
STANDARD TOLERANCES: ISO 2768 H FOR ADDITIONAL INFO. SEE DRG. 72210		© COPYRIGHT W. LUCY & CO. LTD. ALL RIGHTS RESERVED. ALL DIMENSIONS IN MILLIMETERS UNLESS OTHERWISE STATED
DRAWN	SWH	RED HSCO FUSE CARRIER ASSEMBLY INC LABEL
APPRV.	SWH	
DATE	11.05.10	
CRD.No		CUST.

MATERIAL	FINISH	DO NOT SCALE IF IN DOUBT ASK	PROJECTION
SEE B.O.M.	00		1st ANGLE

THM0016294 ISS. 1

THM0016294 ISS. 1 PRINT STATUS